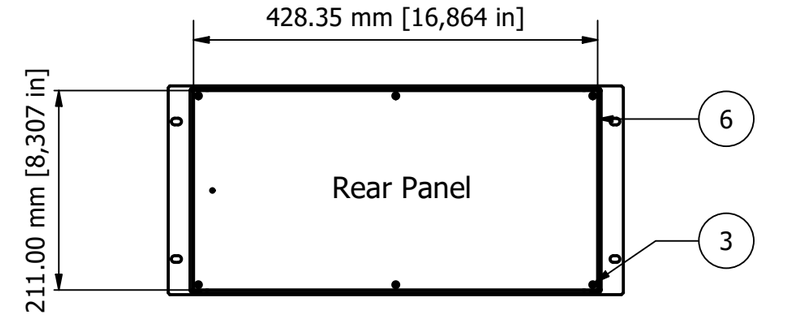

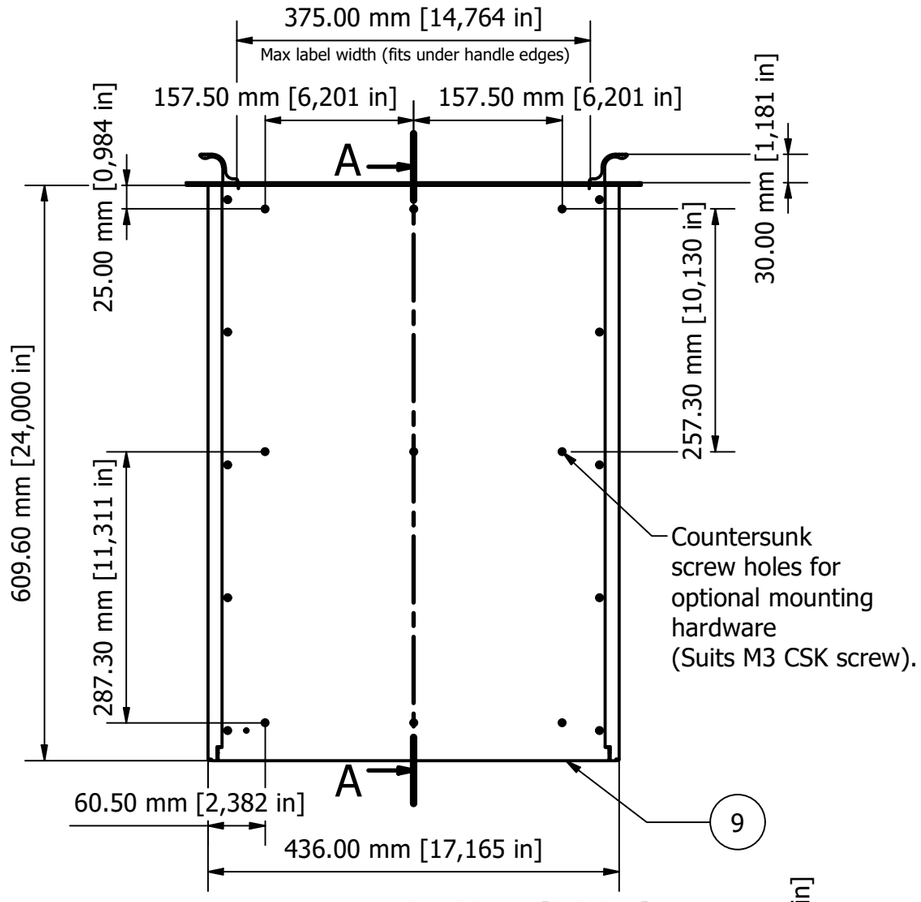

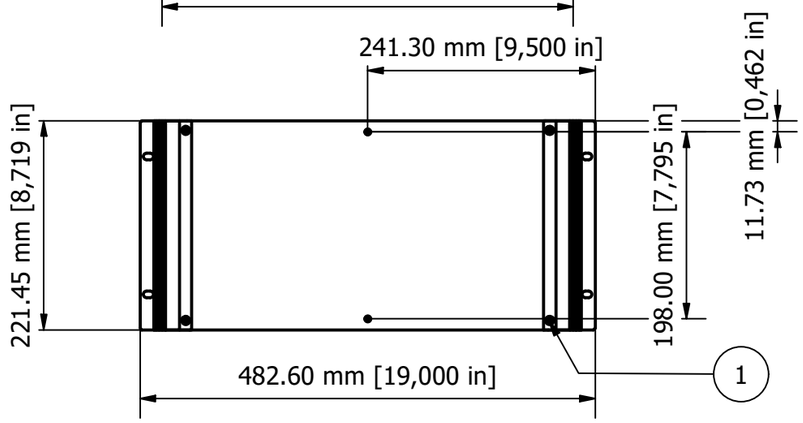

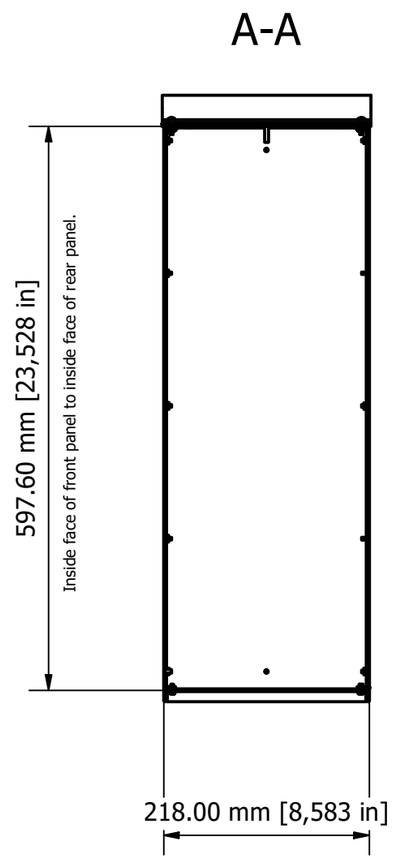

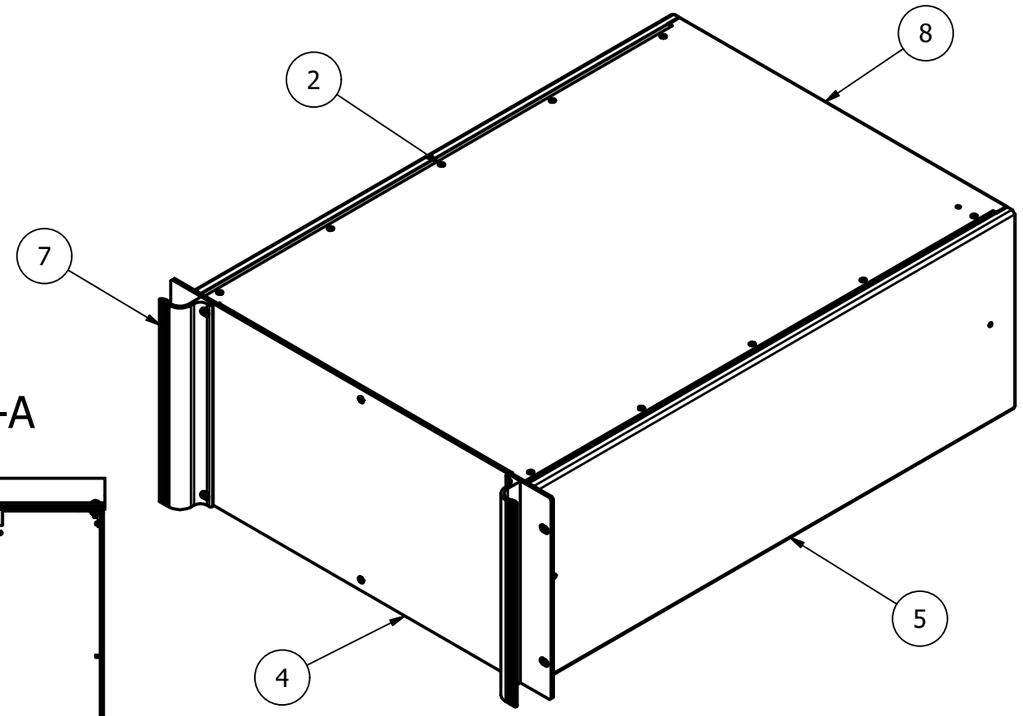

NOTES.
Case metalwork is made from 1.5 mm aluminium and painted RAL 9005 fine texture black.
Front panel is made from 3 mm aluminium.
Handles are made from an aluminium extrusion.
All parts are fitted with M4 studs for earth use.

PARTS LIST			
ITEM	QTY	PART NUMBER	DESCRIPTION
1	4	M4x16 CSK Screw (B)	Front Panel Screws
2	22	M3x8 CSK Screw (B)	Cover and Front Screws
3	6	M3x8 Pan Screw (B)	Rear Panel Screws
4	1	M6219059	Front Panel
5	2	M6202579	Side Panel
6	1	M6201059	Rear Panel
7	2	M6200509	Handles
8	1	M6203089	Top Panel
9	1	M6203099	Base Panel

FIRST ANGLE PROJECTION

Designed by	Description	Date	Scale
L Clark	Combimet 5U x 19" x 24" Unvented	03/02/2022	1:6.5

METCASE ENCLOSURES
15 Brunel Way, Segensworth East, Fareham, Hampshire, PO15 5TX, UK.
Tel: +44 (0)1489 583858 Email: sales@metcase.co.uk
www.metcase.com

Part Number	Issue	Sheet
M6219579	2	1 / 1