PARTS LIST			
ITEM	QTY	PART NUMBER	DESCRIPTION
1	2	M5605001	Front/Rear Bezel
2	1	M5601030	Base/Chassis Assembly
3	1	M5601061	Top Cover
4	1	M5602009	Rear Panel
5	4	M4 x 10 mm CSK	Bezel Fixing Screws
6	4	M3 x 8 mm Pan Screw	Rear Panel Screws
7	4	M5700203	Rack Card Guides

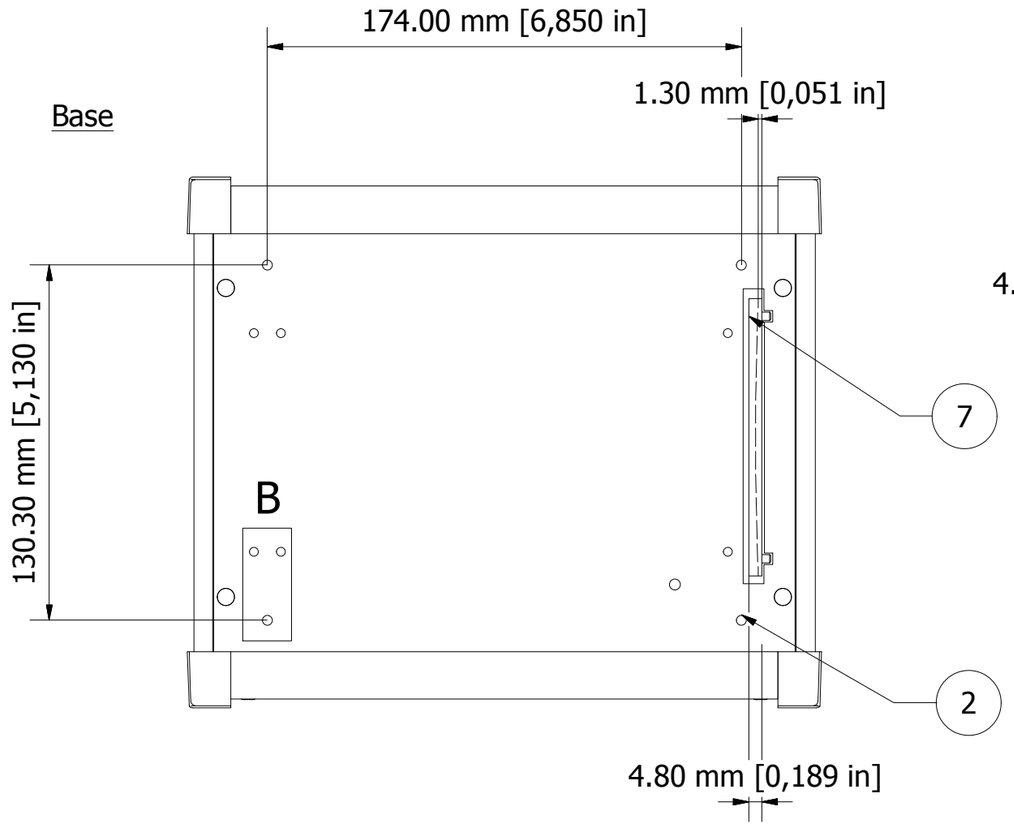

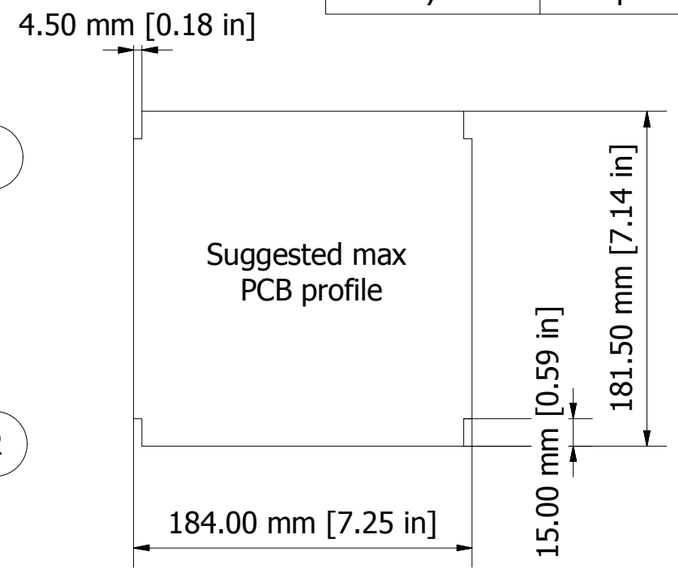

Foot hole detail:
2 holes Ø3.3 mm [0.13 in] & 1 hole Ø 3.8 mm [0.15 in]

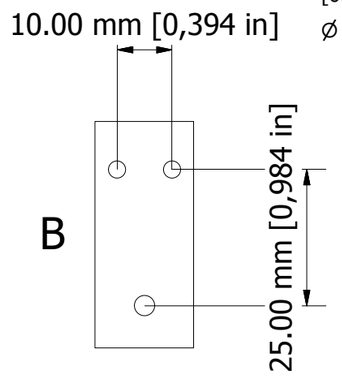

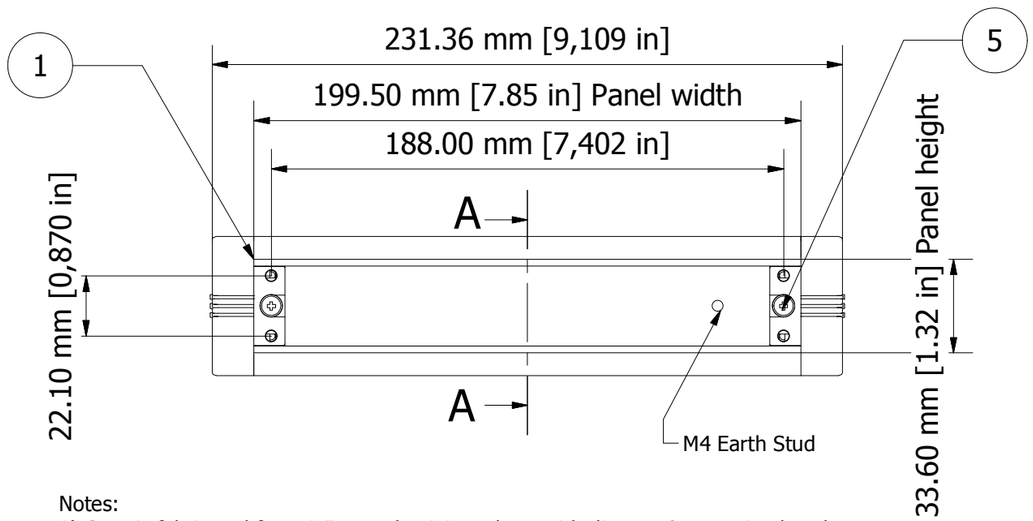

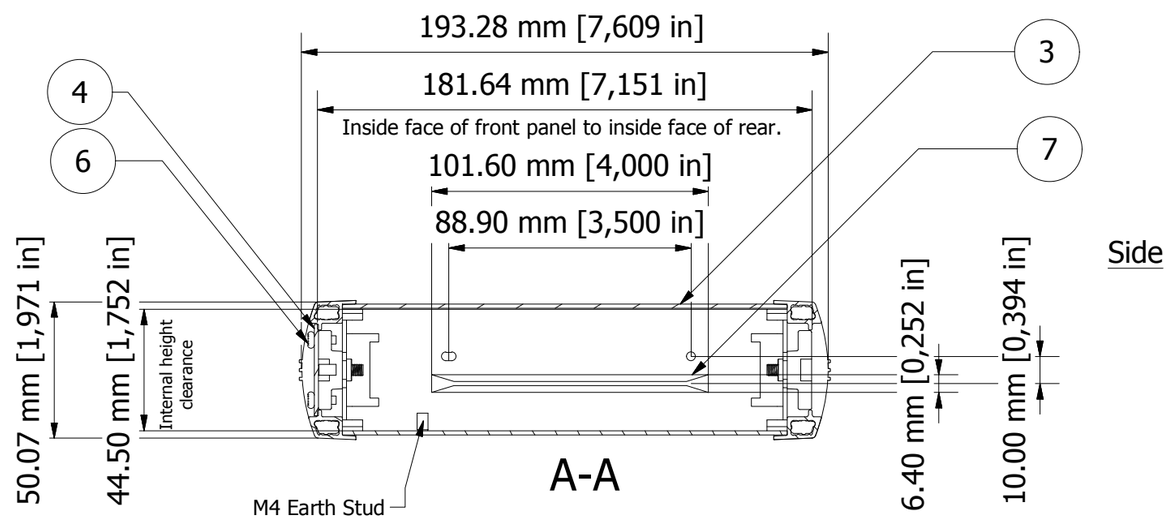

FIRST ANGLE PROJECTION

Notes:
1) Case is fabricated from 1.5 mm aluminium sheet with die cast & extrusion bezels.
2) Case is powder coat painted fine texture with RAL 7040 bezels and RAL 7035 panelwork.
3) Cover, base and rear panel all have M4 x 8 mm studs for earthing points.
4) Case supplied with 4 off plastic card guides - M5700203.

Designed by	Description	Date	Scale
L Clark	Unimet-Plus 1	20/04/2012	1:2.25

METCASE ENCLOSURES
15 Brunel Way, Segensworth East, Fareham,
Hampshire, UK. PO15 5TX
Tel: +44 (0)1489 583858 Email: metcase@okw.co.uk
www.metcase.com

Part Number	Issue	Sheet
M5623015	1	1 / 1